YINGJIAO®

YEC60 SERIES 60W



YEC series is a AC/DC security power supply，allowing the universal input range between 90VAC and 264VAC and incorporating the built-in PFC function.In addition to the primary output, there is a charger output,with a smaller rated current, providing the backup application the security access systems normally need. This series is designed with thorough alarm features,including AC ok and battery low signaling; moreover, the relay contact is provided to facilitate users, system designs.This series of power supply is widely used in emergency lighting system security monitoring and alarm system，UPS system.

Features

- Universal AC input / Full range
- Cooling by free air convection
- Battery low protections
- 100% full load burn-in test
- Protection:Short circuit/Overload/ Over voltage
- Two Years Warranty

Model Information

Yingjiao Part Number	DC Voltage CH1/CH2	Rated Current CH1/CH2	Rated Power	CURRENT RANGE	VOLTAGE ADJ.RANGE
YEC60-13.8	13.8V/13.8V	2.8A/1.5A	59.34W	0~4.3A	12~15V
YEC60-27.6	27.6V/27.6V	1.4A/0.75A	59.34W	0~2.15A	24-29V

Input

VOLTAGE RANGE	90-264VAC/127-370VDC	
FREQUENCY RANGE	47-63Hz	
EFFICIENCY(Typ.)	84%	YEC60-13.8
	84%	YEC60-27.6
AC CURRENT(Typ.)	1.6A/115VAC	
	1A/230VAC	
INRUSH CURRENT(Typ.)	COLD START 30A/115VAC 60A/230VAC	
LEAKAGE CURRENT	<1mA/240VAC	

Output

RIPPLE & NOSE(max.)	120mVp-p	YEC60-13.8
	240mVp-p	YEC60-27.6
VOLTAGE TOLERANCE	±1.0%	
LINE REGULATION	±0.5%	
LOAD REGULATION	±0.5%	
SETUP,RISE TIME	800ms, 50ms/230VAC at full load	
	1600ms, 50ms/115VAC at full load	
HOLD UP TIME (Typ.)	50ms/230VAC at full load	
	10ms/115VAC at full load	

Protection

OVER LOAD	105%-150% Rated Output Power	
	Protection type : Hiccup mode, recovers automatically after	
	fault condition is removed	
OVER VOLTAGE	CH1:14.49~18.63V	YEC60-13.8
	CH1:28.98~37.26V	YEC60-27.6
	Protection type : Hiccup mode, recovers automatically after	
	fault condition is removed	
BATTERY CUT OFF	10±0.5V	YEC60-13.8
	21±1V	YEC60-27.6

Function

AC OK	TTL open collector output, ON : AC OK ;	
	OFF : AC Fail ; Ice : max. 30mA@ 50VDC	
BATTERY LOW	TTL open collector output, ON : Battery Low ;	
	OFF : Battery OK ; Ice : max. 30mA@ 50VDC	
	Battery low voltage : < 11V	YEC60-13.8
	Battery low voltage : < 22V	YEC60-27.6

Environment

WORKING TEMP.	-20 ℃ to +70 ℃ (Refer to "Derating Curve")
Working Humidity	20 ~ 90% RH Non-Condensing
STORAGE TEMP, HUMIDITY	-20℃ ~+85℃,10 ~ 95% RH
TEMP. COEFFICIENT	± 0.03%/℃(0~50℃) on CH1 output
VIBRATION	10~ 500Hz, 2G 10min./1cycle, 60min. each along X, Y,Z axes
MTBF	580K hrs min. MIL-HDBK-217F (25℃)

SAFETY & EMC

SAFETY STANDARDS	UL62368-1, TUV BS EN/EN62368-1,EACTPTC 004 approved
WITHSTAND VOLTAGE	I/P-O/P:3KVAC I/P-FG:2KVAC O/P-FG:0.5KVAC
ISOLATION RESISTANCE	I/P-O/P, I/P-FG, O/P-FG:100M Ohms/ 500VDC/25 ℃/70% RH
EMC EMISSION	Compliance to BS EN/EN55032 (CISPR32) Class B,
	BS EN/EN61000-3-2,-3,
EMC IMMUNITY	Compliance to BS EN/EN61000-4-2,3,4,5,6,8,11,BS EN/EN55035

Note

1. All parameters NOT specially mentioned are measured at 115/230VAC input, rated load and 25℃ of ambient temperature.
2. Ripple & noise are measured at 20MHz of bandwidth by using a 12" twisted pair-wire terminated with a 0.1 μ F & 47 μ F parallel capacitor.
3. Tolerance : includes set up tolerance, line regulation and load regulation.
4. Length of set up time is measured at first cold start. Turning ON/OFF the power supply may lead to increase of the set up time.
5. Heat sink HS1,HS2 can not be shorted.
6. Heat sink HS1 must have safety isolation distance with system case.
7.The power supply is considered a component which will be installed into a final equipment. The final equipment must be re-confirmed that it still meets EMC directives.
8.The ambient temperature derating of 3.5℃/1000m with fanless models and of 5℃/1000m with fan models for operating altitude higher than 2000m(6500ft).

Dimensions & Weight

Length:	103.4mm/4.07in
Width:	62mm/2.44in
Height:	37mm/1.45in
Weight:	130g

Packing

Carton Size:	52 × 32.5 x 11.5 CM
	20.47 x 12.80 x 4.53 in
Master Carton Quantities:	45pcs/Carton

Dimensions and Installation

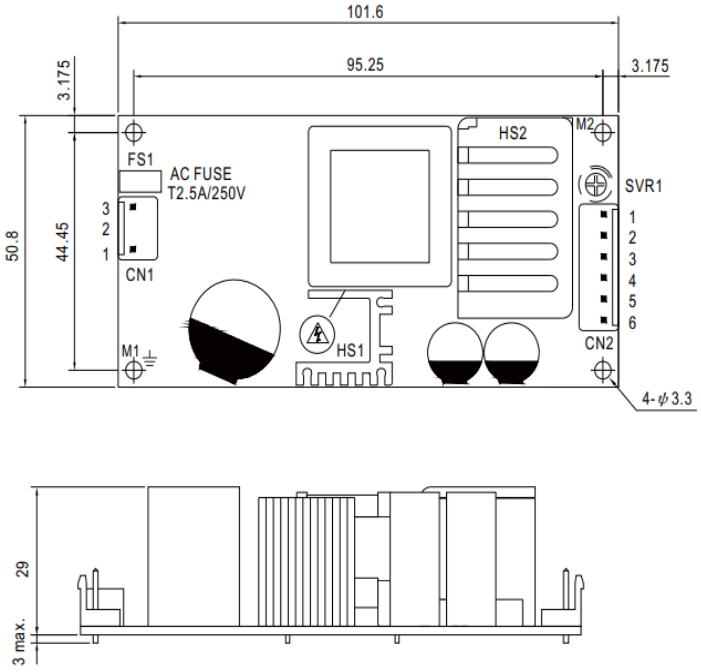

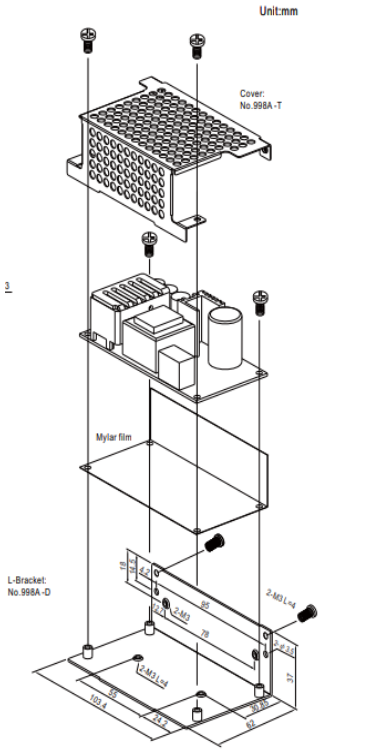

AC Input Connector (CN1) : JST B3P-VH or equivalent

Pin No.	Assignment	Mating Housing	Terminal
1	AC/N	JST VHR or equivalent	JST SVH-21T-P1.1 or equivalent
2	No Pin		
3	AC/L		

DC Output Connector (CN2) : JST B6P-VH or equivalent

Pin No.	Assignment	Pin No.	Assignment	Mating Housing	Terminal
1	Bat. Low	4	Battery +	JST VHR or equivalent	JST SVH-21T-P1.1 or equivalent
2	AC OK	5	+V		
3	Battery -	6	-V		

⚠
1.HS1,HS2 can not be shorted.
2.HS1 must have safety isolation distance with system case.
3. ⏚ Gronding required
4. -V and Bat- can not be shorted

Block Diagram

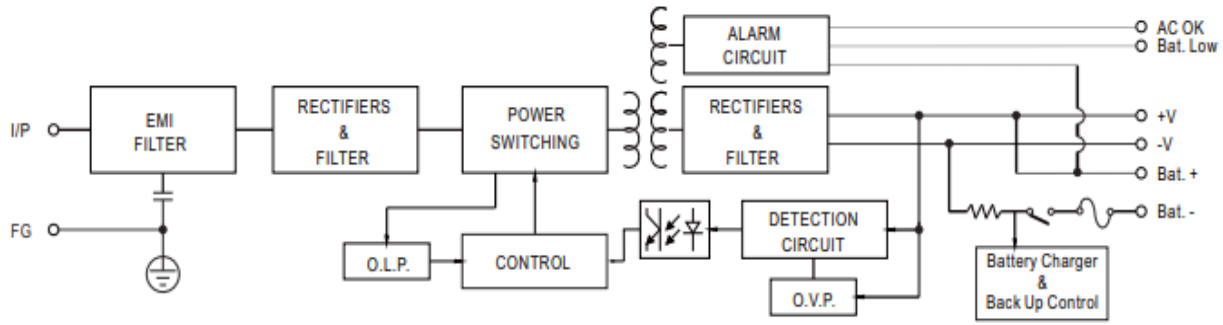

Deduction curve and temperature

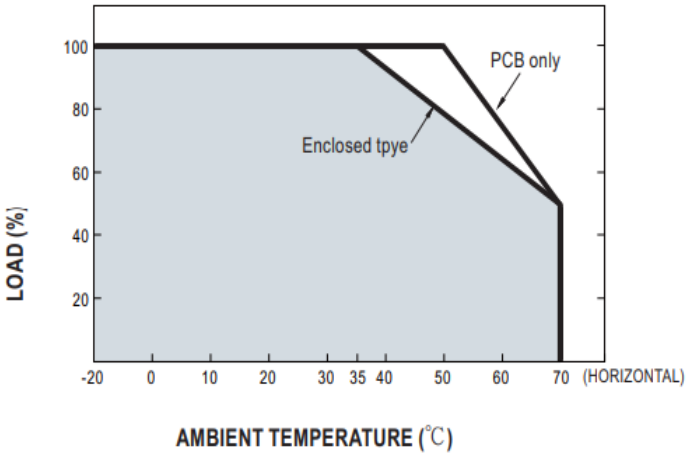

Minus output and input voltage curves

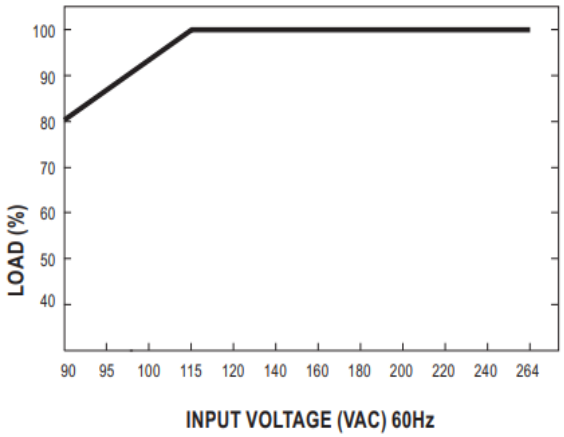

Suggested Application

1.Backup connection for AC interruption

(1) Please refer to the Fig1.1 for suggested connection.

The power supply charges the battery and provides energy to the load at the sametime when the AC main is OK.

The battery starts to supply power to the load when the AC mains fails.

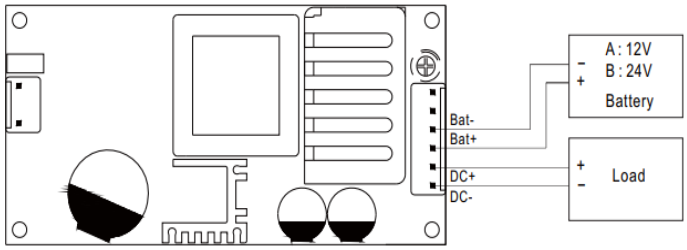

Fig 1.1 Suggested system connection

2.Alarm Signal for AC OK and Battery Low

(1) Alarm Signal is sent out through " AC OK " & " Battery Low " pins.

(2) An external voltage source is required for this function. The maximum applied voltage is 50V and the maximum sink current is 30mA.

(3) Table2.1 explains the alarm function built in the power supply

Function	Description	Output of alarm
AC OK	The signal is "Low" when the power supply turns on	Low (0.3V max. at 30mA)
	The signal turns to be "High" when the power supply turns OFF	High or open(External applied voltage 50V max.)
Battery Low	The signal is "Low" when the voltage of battery is under A:11V, B:22V	Low (0.3V max. at 30mA)
	The signal is "High" when the voltage of battery is above A:11V, B:22V	High or open(External applied voltage 50V max.)

Table 2.1 Explanation of Alarm Signal

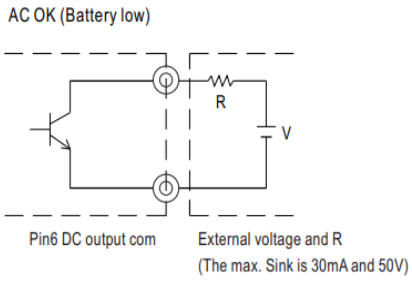

Fig 2.2 Internal circuit of AC OK (Battery Low)